City of El Segundo

Building Safety Division

CUTTING, NOTCHING, AND BORING OF WOOD FRAMING MEMBERS

(Unless an alternate design is provided by a licensed Engineer or Architect)

PART 1

Mechanical Penetrations of Wood Shear Wall Panels

The maximum accumulated length of openings in a shear wall panel shall not exceed 20% of the wall length. Maximum length of each opening shall not exceed 4 ½" in any direction. (**See Figure 1**).

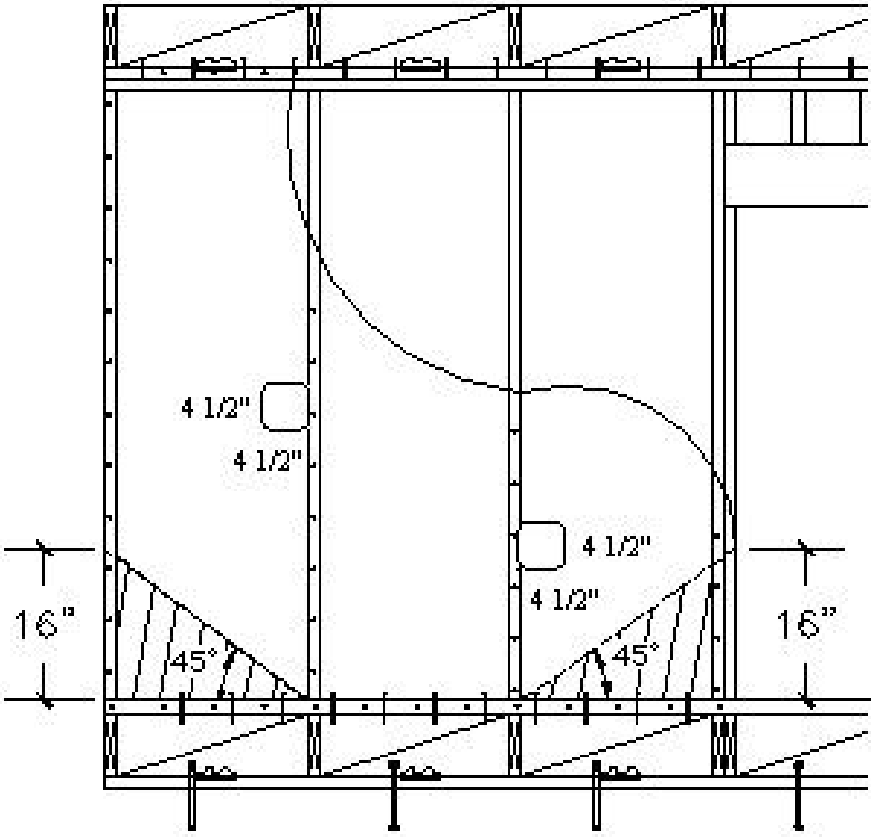

2–4 1/2" WIDE CUTS = 9" IN A 4 FT. PANEL. THE 20% ALLOWABLE EQUALS 9.6" (NO CUTS OR HOLES IN SHEATHING WITHIN 16" OF CORNERS.)

Figure 1

It should be noted that the dimension of the opening shall be considered to be the maximum length of the cut made by the saw (**See Figure 2**). Only a circular bored hole or square hole cut with a radius on the corners is acceptable.

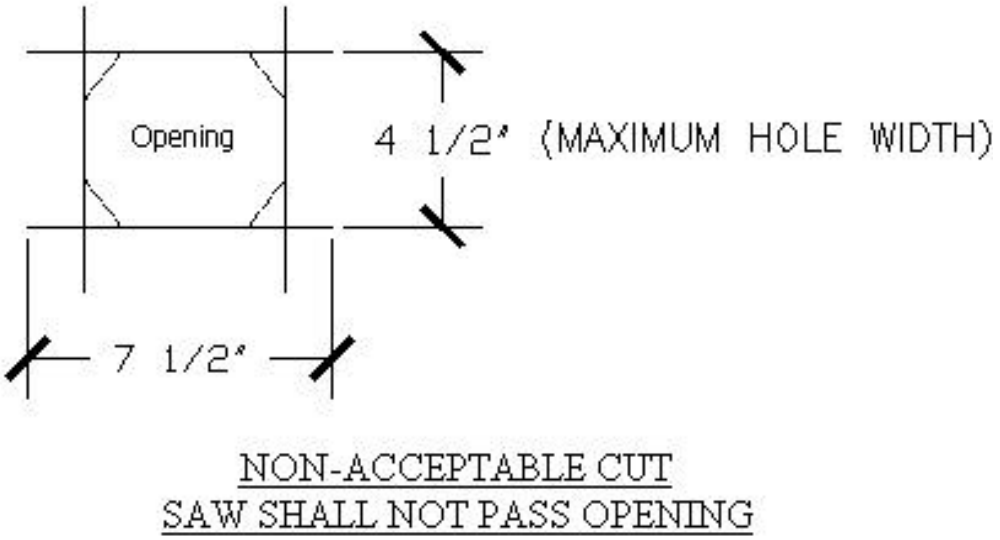

Figure 2

PART 2
Mechanical Penetrations of Top and Sill Plates of Wood Shear Walls

Plumbing, electrical and other mechanical penetrations of the top or sill plate framing members, when located within a wood panel shear wall, shall be limited to tolerances shown on **Figure 3** (unless an alternate designed detail is shown on the approved plans).

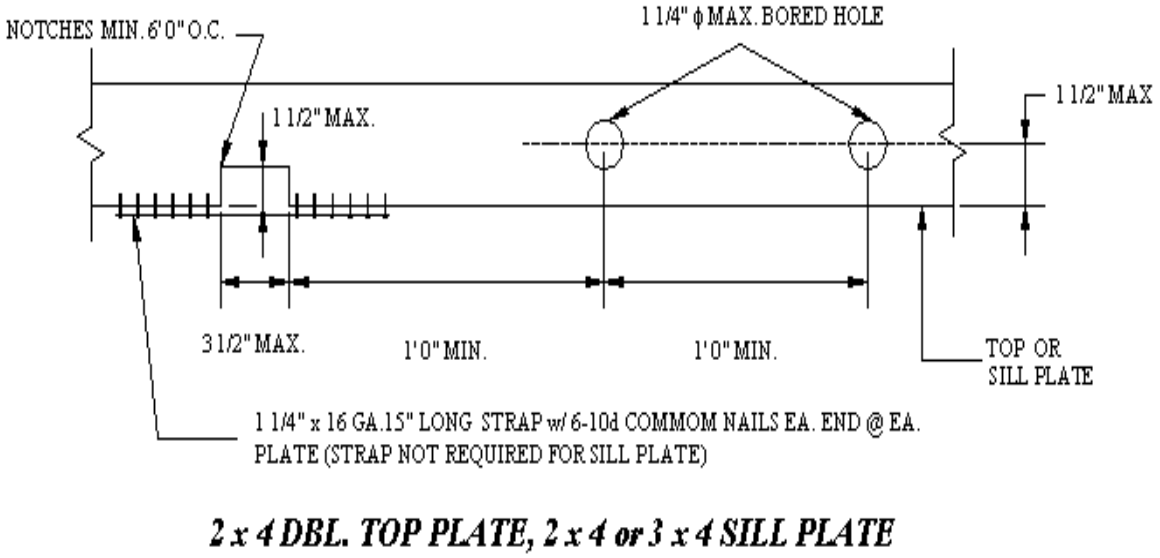

Figure 3

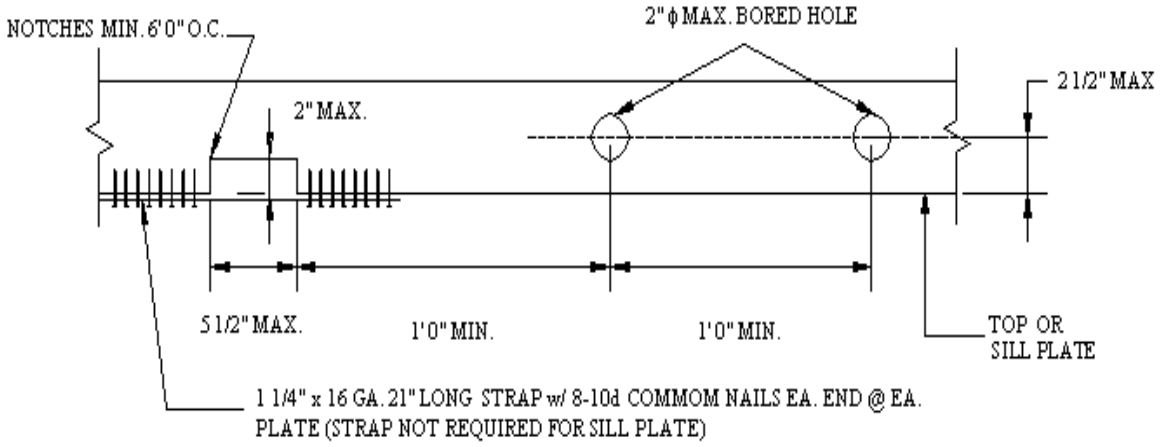

2 x 6 DBL. TOP PLATE, 2 x 6 or 3 x 6 SILL PLATE

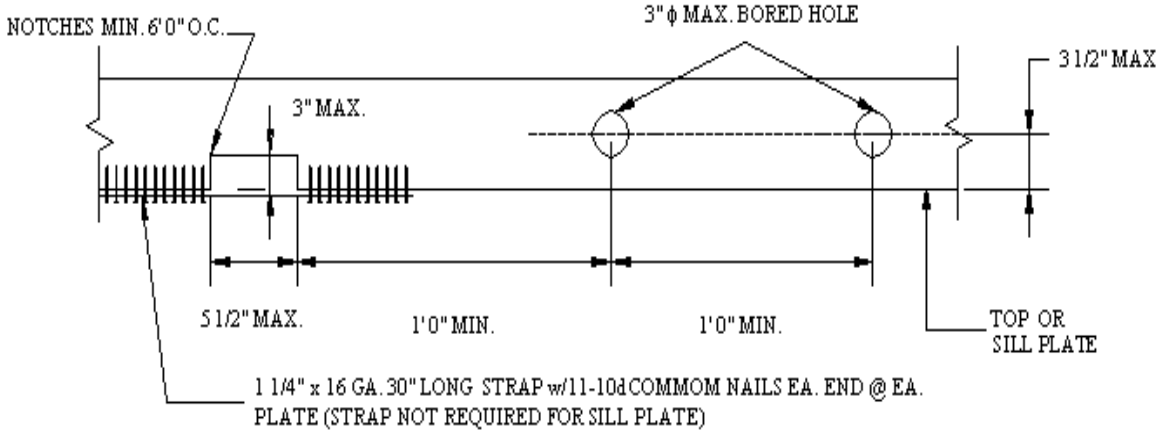

2 x 8 DBL. TOP PLATE, 2 x 8 or 3 x 8 SILL PLATE

Figure 3 *(continued)*

PART 3
Notching and Boring of Joist and Rafters

Section 2308.10.4.2 – Notches at the ends of joists shall not exceed one-fourth the joist depth. Holes bored in the joists shall not be within 2 inches of the top or bottom of the joist, and the diameter of any such hole shall not exceed one-third the depth of the joist. Notches in the top or bottom of joists shall not exceed one-sixth the depth and shall not be located in the middle third of the span. **See Figure 4** below.

(**NOTE**: If floor/ceiling assembly separates two dwelling units, allow ¼ inch clearance around piping for sound transmission control).

D/4 Notching @ end
2 x 6 = 1 3/8”
2 x 8 = 1 13/16”
2 x 10 = 2 5/16”
2 x 12 = 2 13/16”

NOTE: Notching not permitted in middle 1/3 span

D/4 Notching @ end 1/3
2 x 6 = 1 3/8”
2 x 8 = 1 13/16”
2 x 10 = 2 5/16”
2 x 12 = 2 13/16”

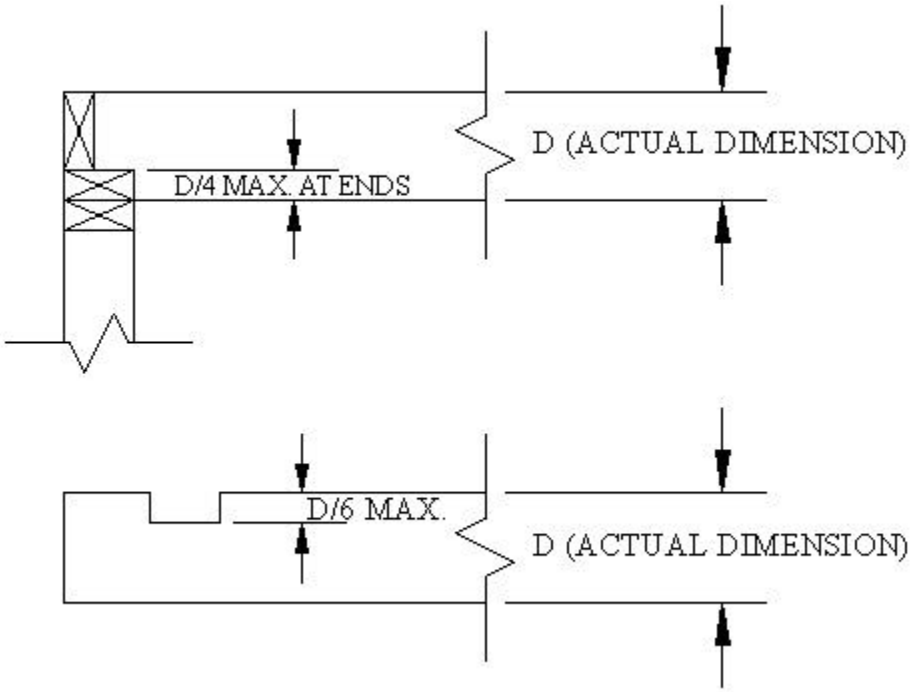

CUTTING AND NOTCHING LIMITATIONS

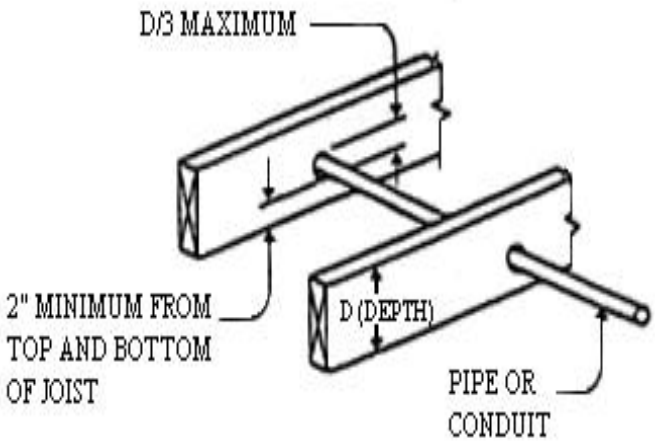

Bored holes D/3
2 x 6 = 1 13/16"
2 x 8 = 2 7/16"
2 x 10 = 3 1/16"
2 x 12 = 3 3/4"

Figure 4

PART 4
Framing Around Openings For Horizontal Members

CBC Section 2308.10.4.3 – When the span of the header around openings exceeds 4 feet, the trimmer and header joists shall be doubled or lumber of equivalent cross section shall be used. The header shall be supported by framing anchors or joist hangers, when its length exceeds 6 feet, unless it is bearing on a header, partition, or wall. When the length of the tail joists exceeds 12 feet, framing anchors shall be provided to connect the tail joists to the header.

PART 5
Pipes in Walls

CBC Section 2308.9.8 – Partitions containing plumbing, heating, or other pipes shall shall be so framed and the joists underneath so spaced as to give proper clearance for the piping. Where a partition containing such piping runs parallel to the floor joist, the joists underneath such partitions shall be doubled and spaced to permit the passage of such pipes and shall be bridged (**See Figure 5**).

PART 6
Cutting and Notching of Wood Stud walls

CBC Section 2308.9.10 – In exterior walls and bearing partitions, any wood stud may be cut or notched to a depth not exceeding 25 percent of its width. Cutting or notching of studs to a depth not greater than 40 percent of the width of the stud is permitted in nonbearing partitions supporting no loads other than the weight of the partition. Remember that the depth of the notch may be determined by the saw kerf depth not just the depth of material removed in the notch. (**See Figure 6**). (**NOTE**: If wall assembly separates two dwelling units, allow ¼ inch clearance around piping for sound transmission control.)

PART 7
Bored Holes in Wood Stud Walls

CBC Section 2308.9.11 – A hole not greater in diameter than 40 percent of the stud width may be bored in any wood stud. Bored holes not greater than 60 percent of the width of the stud are permitted in nonbearing partitions or in any wall where each bored stud is doubled, provided not more than two such successive doubled studs are so bored.

In no case shall the edge of the bored hole be nearer than 5/8 inch to the edge of the stud. Bored holes shall not be located at the same section stud as a cut or a notch. (**See Figure 6**). (**NOTE**: If wall assembly separates two dwelling units, allow ¼ inch clearance around piping for sound transmission control.)

When a contractor is doing retro-fit work such as repiping, installing HVAC or redoing the electrical system of the existing structure, these requirements should be used as limits. *When removing considerable portions of drywall or cutting into an existing shear wall a Building Permit (from El Segundo Building and Safety) may be required. This permit may be issued to the Plumbing, Electrical, or HVAC contractor doing the retro-fit work which is part of his trade.*

All contractors should be aware of ***fire & sound separations*** *as well as* ***structural standards*** *that shall be maintained when working on an existing commercial or multi-residential building.*

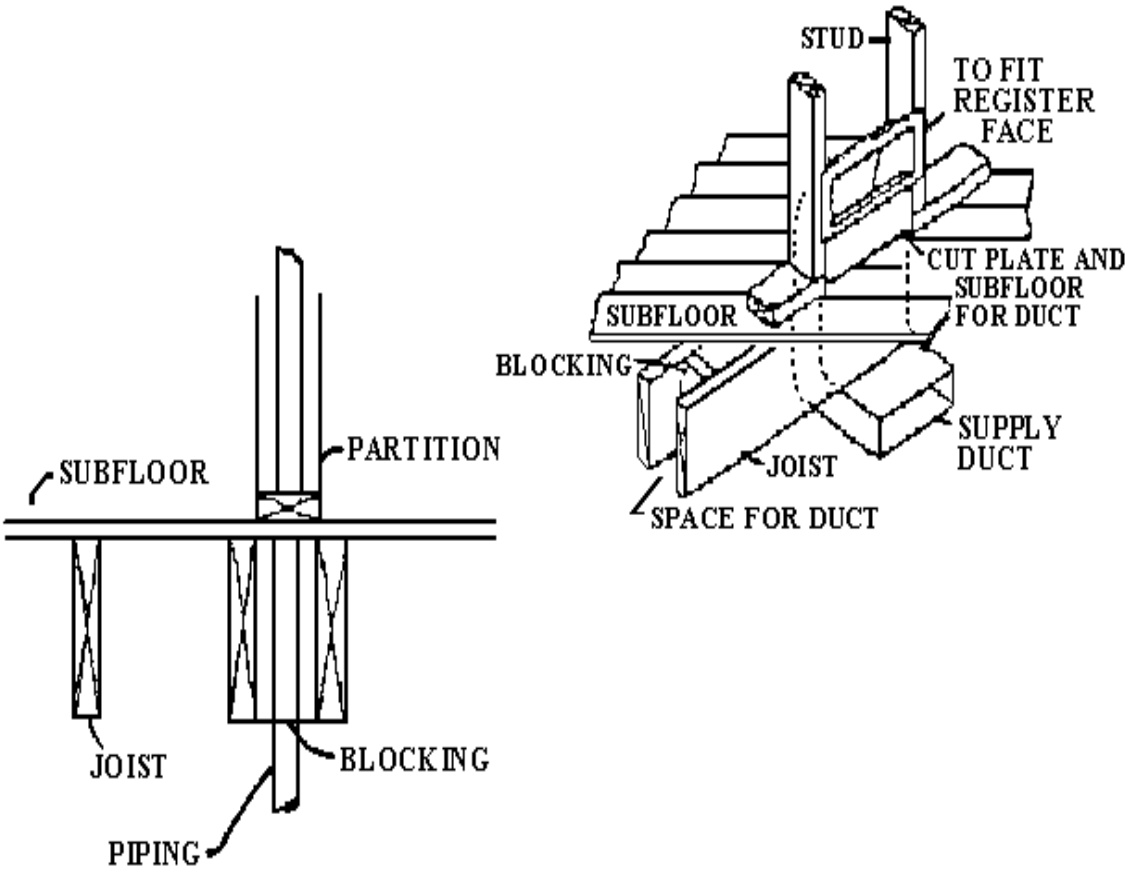

FLOOR FRAMING TO ACCOMMODATE
PIPING AND DUCTWORK

Figure 5

NOTCHING AND BORING LIMITS FOR WOOD STUDS

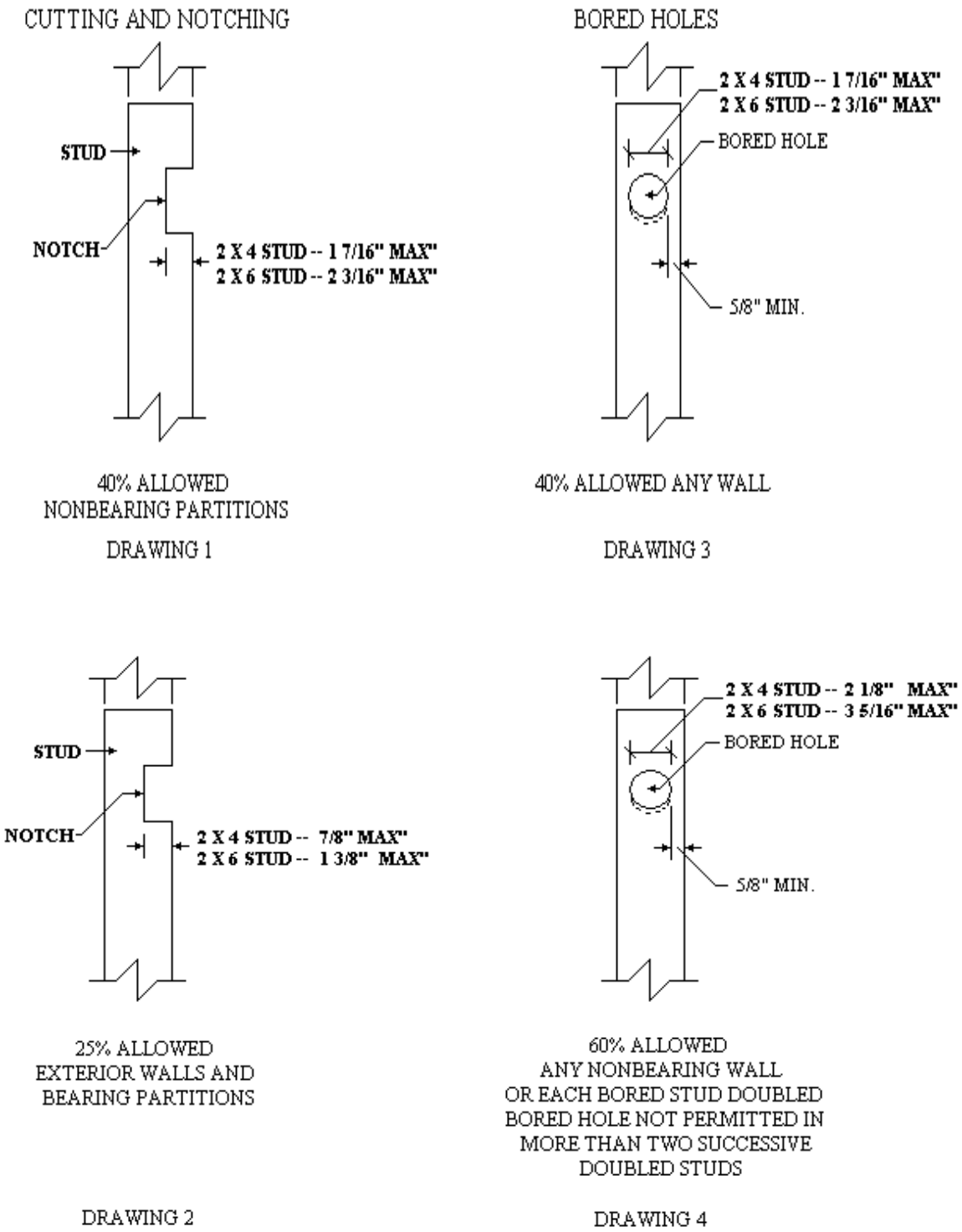

Figure 6: Maximum Allowed Notching and Drilling for Normal Construction with 2x Studs